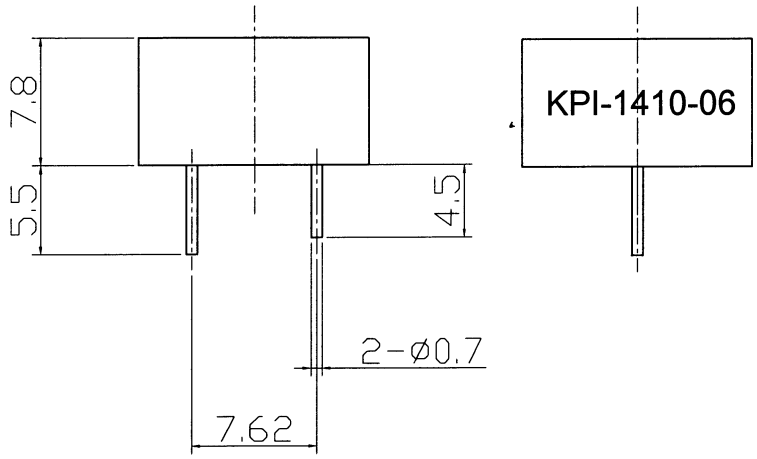

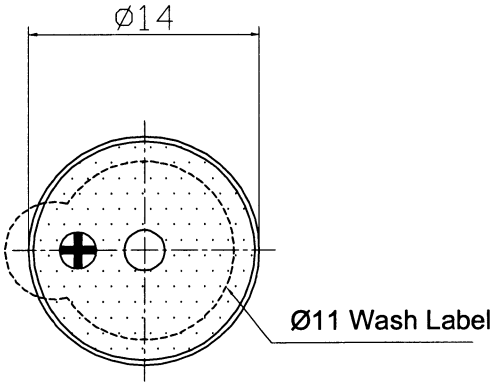

SPECIFICATION

1.Rated Voltage 6VDC
2.Operating Voltage .....1.5~12VDC
3.Max.Rated Current .....8mA at 6VDC
4.Resonant Frequency .....4.5±0.5KHz
5.Min.Sound Pressure Level.....80dB at 6VDC/10cm
6.Tone Nature .....Continuous
7.Case Material/Color .....PBT/Black
8.Operating Temperature .....-20~+80℃
9.Store Temperature .....-30~+100℃
10.Weight 2g

No.	DESCRIPTION	APPROVED	DATE

TOLERANCES UNLESS NOTED OTHERWISE
.X ±
.XX ±
.XXX ±
90° FORMED ANGLES +2° -1°

FIRST ANGLE PROJECTION

APPROVALS | DATE
DRAWN
CHECKED
APPROVED | 08.05.19

KEPO NINGBO KEPO ELECTRONIC CO.,LTD
http://www.chinaacoustic.com

Piezo Buzzer Quartz-1
KPI-1410-06

UNIT mm | DWG NO. OEM2917
SCALE | SHEET | VER 1.0